Starhub

SH1-10 SH1-20 Install Guide

Colorado vNet™
Life Simplified™

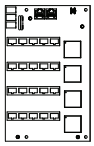

x1 Starhub Module

x4 Screws

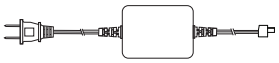

x1 Power Supply

x1 Secondary Power Jumper Cable

1

ATTENTION: Observe precautions for handling electrostatic sensitive devices!

Using the four provided screws mount the Starhub Module to an open position in the Wall Cabinet.

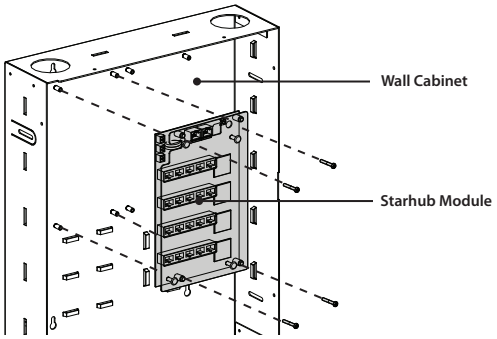

1A

Alternative mounting for right side of Wall Cabinet.

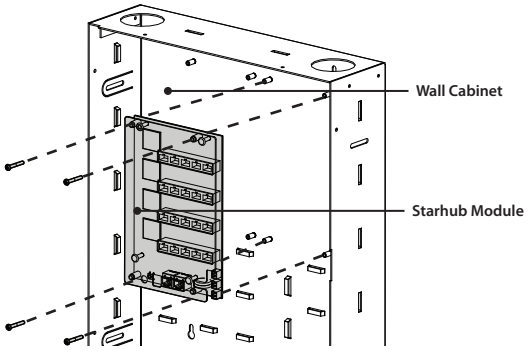

2

If secondary power for the Starhub is not being used, jump to STEP 7. Otherwise continue to STEP 3.

3

Insert the power plug from the Primary Power Supply into the Power Plug Connector labeled "A".

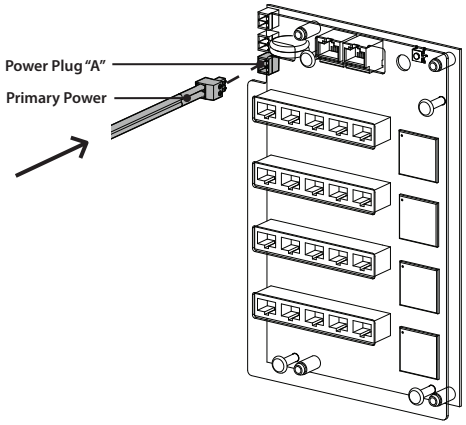

4

Connect the power plug from either the Secondary Power Supply (if this Starhub is first in the secondary power distribution chain) or the Incoming Secondary Power Jumper Cable into the Power Plug Connector "B".

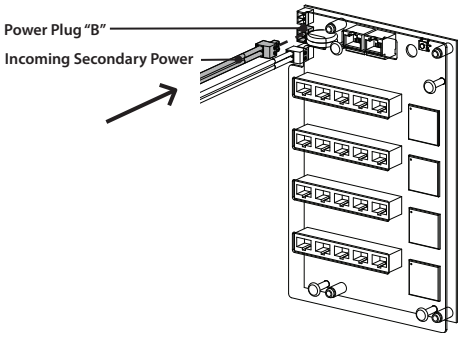

5

Connect the Outgoing Secondary Power Jumper Cable into the Power Plug Connector labeled "C". If this is the last Starhub module in the secondary power distribution chain this step is unnecessary and the jumper cable may be stored in the Wall Cabinet for future use.

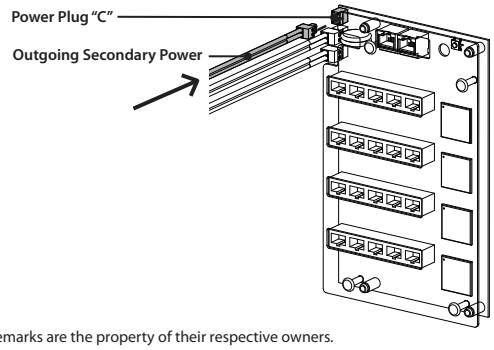

Colorado vNet and Life Simplified are trademarks of Colorado vNet, LLC. All other trademarks are the property of their respective owners.

Colorado vNet™
Life Simplified™

6
Jump to STEP 9.

7
Insert the power plug from the Primary Power Supply into the Power Plug Connector labeled "B".

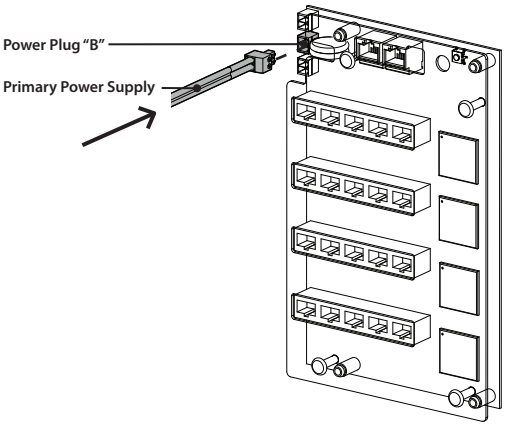

8
Connect the two ends of the Secondary Power Jumper Cable into Barrel Plug Connectors "A" and "C", forming a loop.

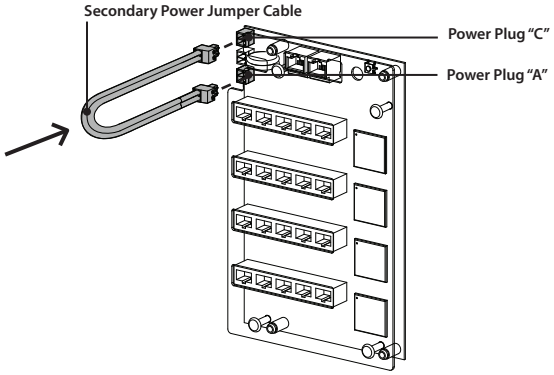

9
Connect the Incoming and Outgoing Backbone BUS Cables using the appropriate RJ-45 Connectors.

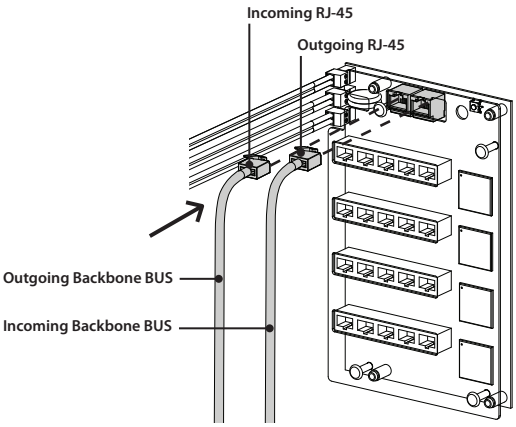

10
If this IS the last module on the backbone, move the Termination Switch to the terminated position labeled ON.

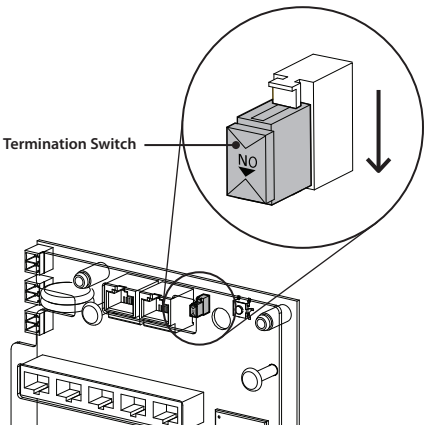

10A
If this is NOT the last module on the backbone, verify that the Termination Switch is in the unterminated position.

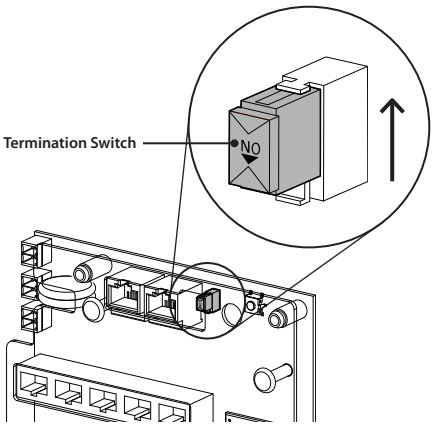

Colorado vNet and Life Simplified are trademarks of Colorado vNet, LLC. All other trademarks are the property of their respective owners.

11

Connect each individual Module BUS Cable using the RJ-45 Connectors.

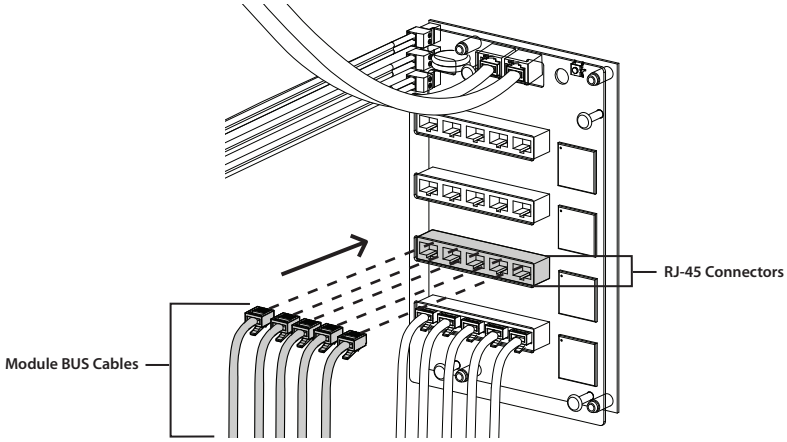

Colorado vNet and Life Simplified are trademarks of Colorado vNet, LLC. All other trademarks are the property of their respective owners.